1. GRAPHIC + ANTIREFLECTION PROTECTOR **PLACEMENT**

CONTENT

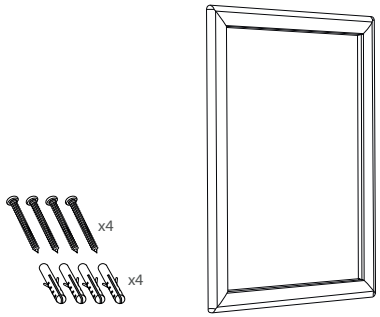

Open and check the content of the boxes and take out all the pieces carefully.

For setting-up frame, you must place its graphics (supplied separately) to the Click Frame following the next steps describre below. Antireflection protector and screws included.

GRAPHIC ATTACHMENT **BY CLICK FRAME**

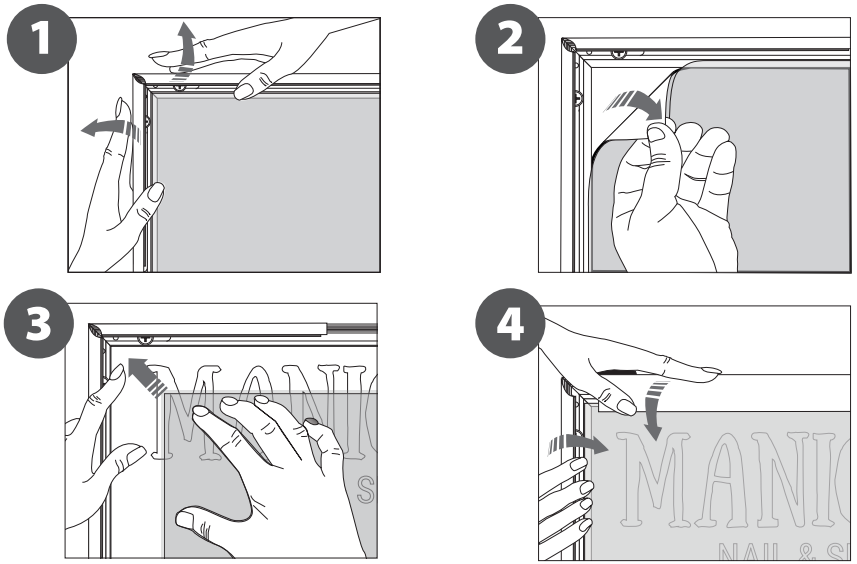

For those cases in which the graphic is **supplied by the client,** we recommend making use of the materials listed in the following **QR code** (scan for downloading Excel file). Please contact us or visit **www.cashdisplay.com** for more information.

SNAP FRAME SAFE CORNER 32MM 13.933-A3 | *ASSEMBLY INSTRUCTIONS*
13.933-A2 | 13.933-A1 | 13.933-A0 | 13.933-B2 | 13.933-B1 | 13.933-B0
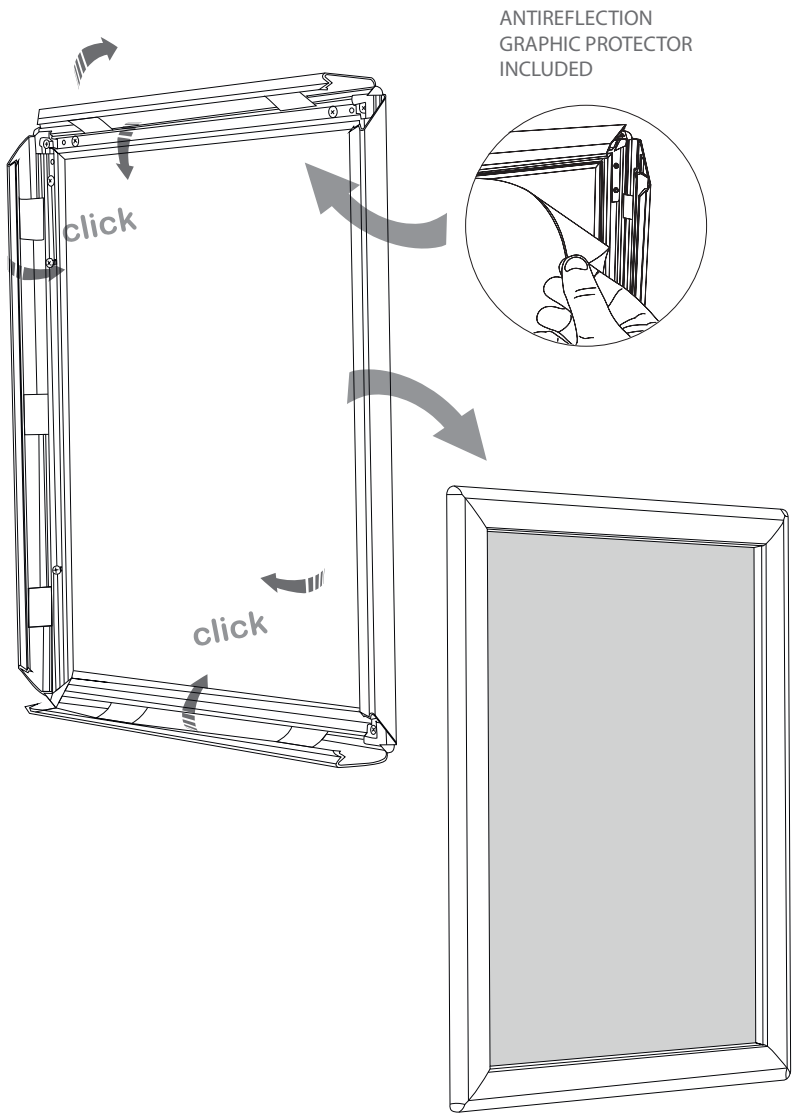
2. SET UP FRAME **STRUCTURE**