1. GRAPHIC + ANTIREFLECTION PROTECTOR **PLACEMENT**

CONTENT

Open and check the content of the boxes and take out all the pieces carefully.

For setting-up frame, you must place its graphics (supplied separately) to the Click Frame following the next steps. Screws and antireflection protector are included.

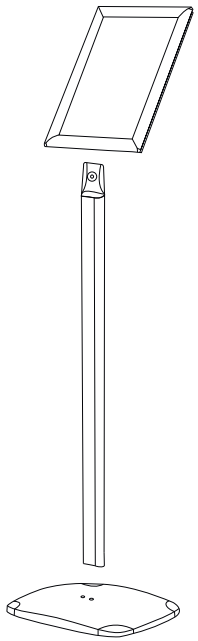

GRAPHIC ATTACHMENT **BY CLICK FRAME**

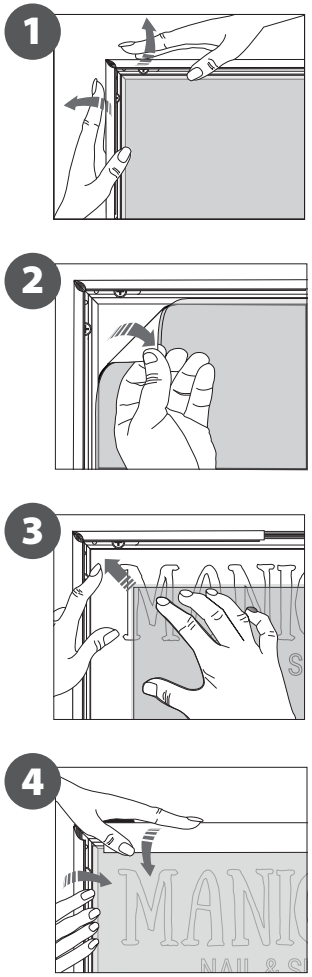

For those cases in which the graphic is **supplied by the client,** we recommend making use of the materials listed in the following **QR code** (scan for downloading Excel file). Please contact us or visit **www.cashdisplay.com** for more information.

DECORATIVE MENUBOARD 13.953-A4 | 13.953-A3 *ASSEMBLY INSTRUCTIONS*
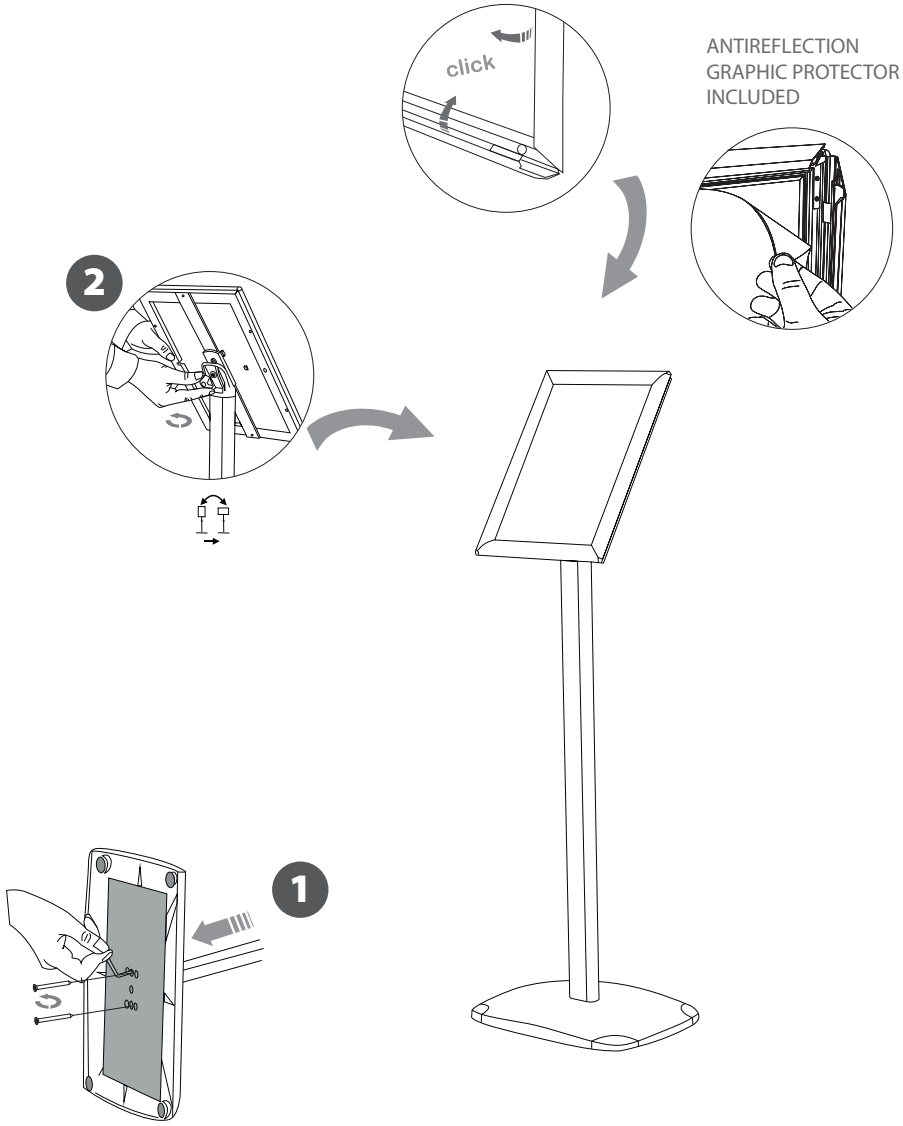
2. SET UP FRAME **STRUCTURE**