1. GRAPHIC **UPPER ATTACHMENT**

CONTENT

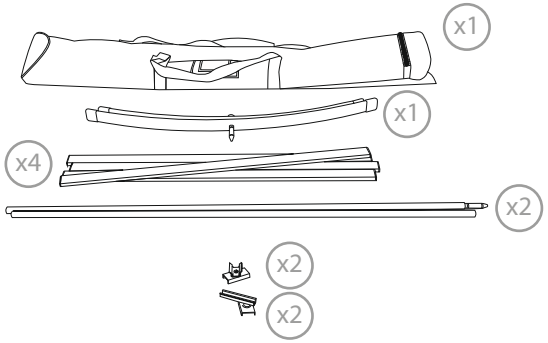

Open the bag, check the content of the bag and take out all the pieces carefully.

To set-up the Roll Up, first you must attach its graphic (supplied separately) to the upper profile following the **next steps** showed below.

GRAPHIC ATTACHMENT **BY SNAP RAIL**

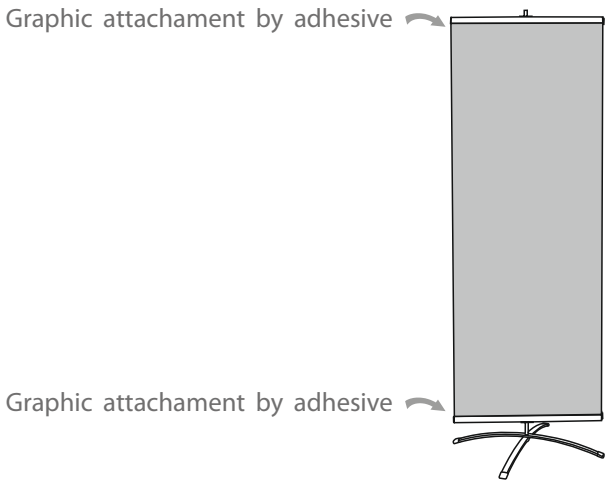

For those cases in which the graphic is **supplied by the client,** we recommend making use of the materials listed in the following **QR code** (scan for downloading Excel file). Please contact us or visit **www.cashdisplay.com** for more information.
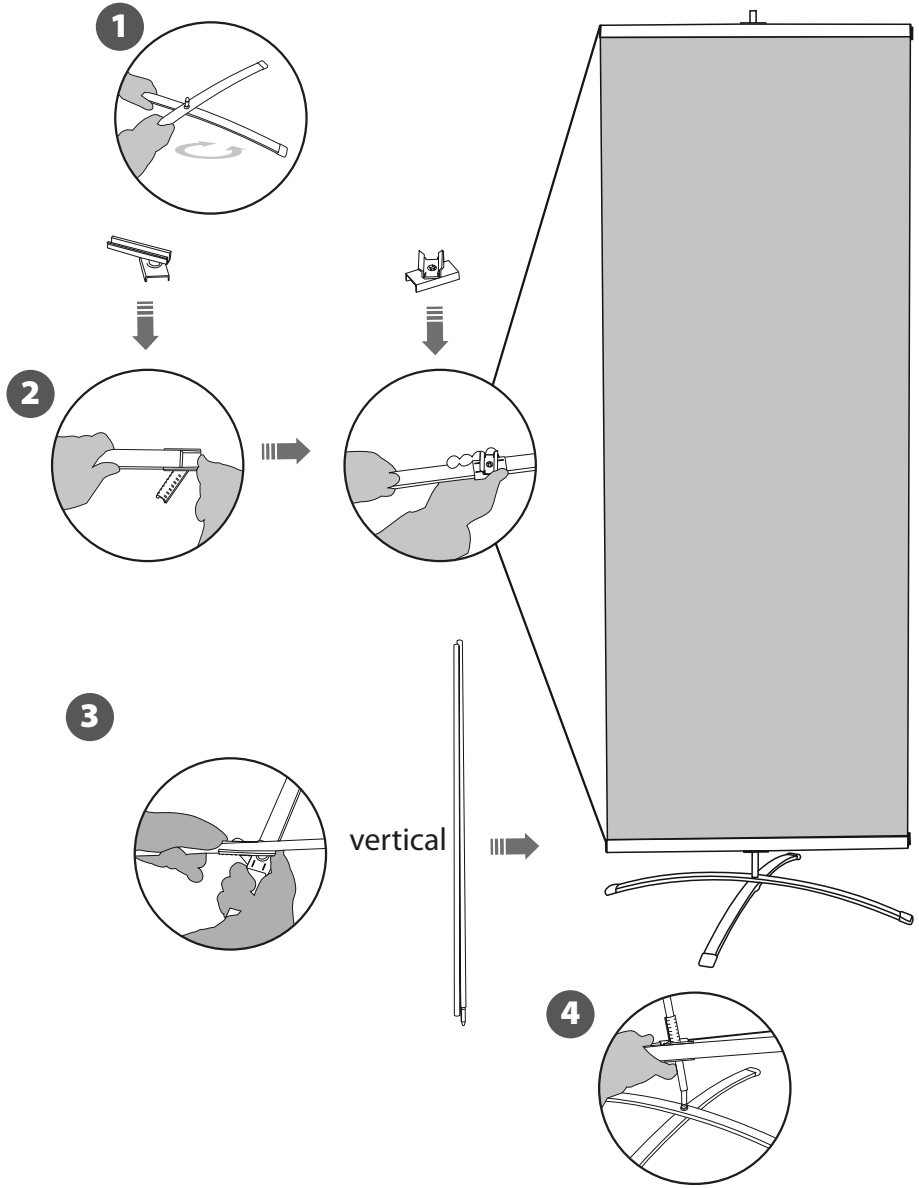
2. GRAPHIC **BOTTOM ATTACHMENT**